Model(s) Z825F2-XL

AquaSpec® single-control lab faucet with 6″ cast iron spout and cross handle

TAG_____

Architectural/Engineering Specification:

Polished chrome-plated single laboratory faucet with integral shank, a quarter turn ceramic disc cartridge and a 6″ [152mm] cast brass swing spout. Unit is furnished with a 2.2 GPM [8.3 L] pressure compensating aerator (complying with ANSI A112.18.1 Standard for flow), a vandal-resistant color-coded metal four arm handle, mounting hardware and a 1/2″ NPSM coupling nut for standard lavatory riser.

Zurn Lead Compliant* "XL" products are a line of durable, high quality brass faucets and fixtures that are designed and manufactured to comply with state laws and local codes that mandate lead content levels. Zurn "XL" products are manufactured with *not more than 0.25% lead content when used with respect to wetted surfaces of pipes and pipe fittings, plumbing fitting and fixtures: California Health & Safety Code § 116875; Vermont 9 VCA § 2470h.

PRODUCT FEATURES:

- Heavy-duty Quarter Turn Ceramic Disc Cartridge
- Chrome-plated Cast Brass Body with Integral Shank
- Vandal resistant 4 arm handle

Product Compliance: ASME A112.18.1/CSA B125.1
CSA B125.1

**Although products with certain combinations of options and features will meet or comply with these standards and/or certifications, not every combination of options and features will result in such compliance. If you have any questions about your particular product, please contact our Customer Care Dept. at 1-855-ONE-ZURN (United States) or 1-877-892-5216 (Canada) for confirmation.*

Installation Guide - CF1531.pdf

SUFFIX OPTIONS:

☐	-AR	Anti-Rotation Pins
☐	-G	1-1/4" [32mm] Grid Strainer Drain

AERATOR OPTIONS:

	Suffix	Flowrate GPM [L]	Vandal-Resistant	Pressure Compensating	Outlet Type
☐	-16F	1.0 GPM [3.8L]	x	x	Spray
☐	-17F	1.5 GPM [5.7L]	x	x	Aerator
☐	-18F	1.5 GPM [5.7L]	x	x	Laminar
☐	-22F	1.0 GPM [3.8L]	x		Laminar
☐	-25F	0.35 GPM [1.3L]	x	x	Spray
☐	-27F	0.5 GPM [1.9L]			Laminar
☐	-28F	0.5 GPM [1.9L]	x		Laminar
☐	-2F	2.2 GPM [8.3L]	x		Aerator
☐	-3F	0.5 GPM [1.9L]	x		Spray
☐	-4F	2.2 GPM [8.3L]	x		Laminar
☐	-7F	1.0 GPM [3.8L]		x	Spray

Architectural/Engineering Approval

Design and dimensional data (inches and [mm]) are subject to manufacturing tolerances and change without notice.

⚠WARNING: *Cancer and Reproductive Harm – www.P65warnings.ca.gov*
⚠ADVERTENCIA: *Cáncer y daño reproductivo – www.P65warnings.ca.gov*
⚠AVERTISSEMENT: Cancer *et effets néfastes sur la reproduction – www.P65warnings.ca.gov*

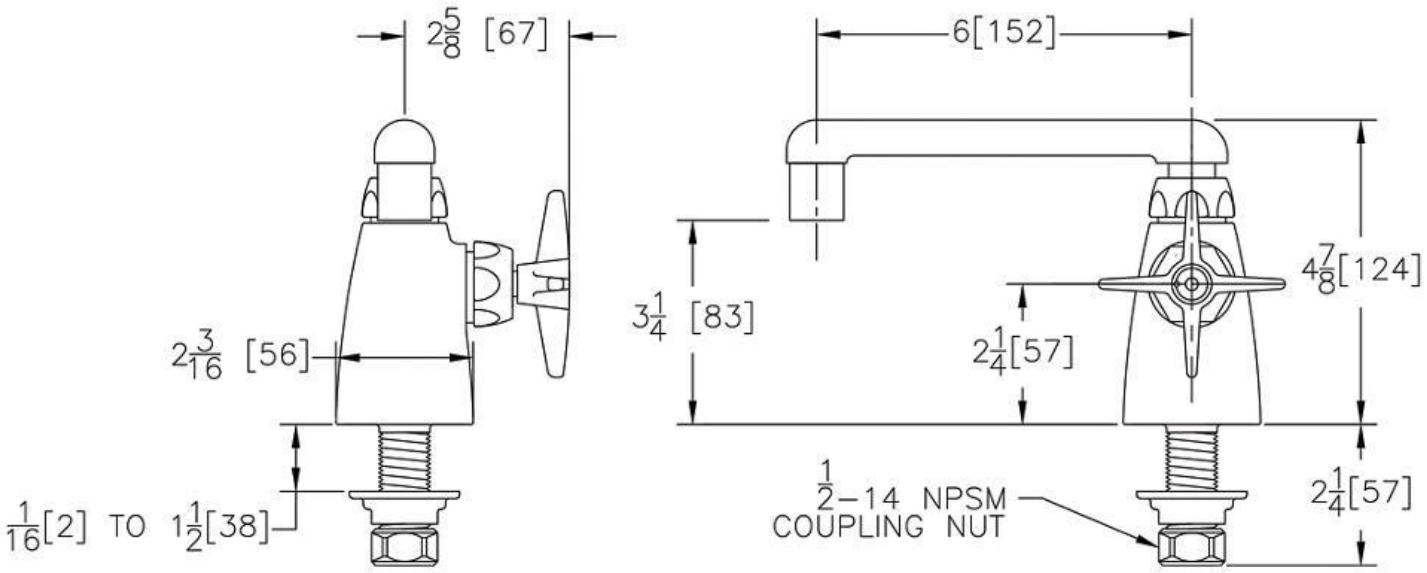

NOTE: All dimensions are for reference only. Do not use for pre-plumbing.

Design and dimensional data (inches and [mm]) are subject to manufacturing tolerances and change without notice.

⚠WARNING: *Cancer and Reproductive Harm – www.P65warnings.ca.gov*
⚠ADVERTENCIA: *Cáncer y daño reproductivo – www.P65warnings.ca.gov*
⚠AVERTISSEMENT: Cancer *et effets néfastes sur la reproduction – www.P65warnings.ca.gov*