Model(s) Z824S0-XL

AquaSpec® Single-Control Bent Riser Faucet

TAG_____

Architectural/Engineering Specification:
Polished chrome plated cast brass single control faucet with a side 8" [203mm] bent riser spout, a ceramic disc cartridge and a temperature limit stop. Unit is furnished with a 2.2 GPM [8.3 L] pressure compensating aerator (complying with ANSI A112.18.1 Standard for flow), a metal ADA compliant lever handle, stainless steel flex connection hoses and mounting hardware.

PRODUCT FEATURES:

- Heavy-duty Quarter Turn Ceramic Disc Cartridge
- Chrome-plated Cast Brass Body
- Single Control Lever Handle
- Stainless Steel Flex Connection Hoses

SUFFIX OPTIONS:

☐	-HS	Hose and Spray

AERATOR OPTIONS:

	Suffix	Flowrate GPM [L]	Vandal-Resistant	Pressure Compensating	Outlet Type
☐	-16M	1.0 GPM [3.8L]	x	x	Spray
☐	-17M	1.5 GPM [5.7L]	x	x	Aerator
☐	-18M	1.5 GPM [5.7L]	x	x	Laminar
☐	-22M	1.0 GPM [3.8L]	x		Laminar
☐	-2M	2.2 GPM [8.3L]	x		Aerator
☐	-3M	0.5 GPM [1.9L]	x		Spray
☐	-4M	2.2 GPM [8.3L]	x		Laminar
☐	-7M	1.0 GPM [3.8L]		x	Spray
☐	-25M	0.35 GPM [1.3L]	x	x	Spray
☐	-27M	0.5 GPM [1.9L]			Laminar
☐	-28M	0.5 GPM [1.9L]	x		Laminar

Product Compliance: NSF 61

**Although products with certain combinations of options and features will meet or comply with these standards and/or certifications, not every combination of options and features will result in such compliance. If you have any questions about your particular product, please contact our Customer Care Dept. at 1-855-ONE-ZURN (United States) or 1-877-892-5216 (Canada) for confirmation.*

Installation Guide - CF1045.pdf

Architectural/Engineering Approval

Design and dimensional data (inches and [mm]) are subject to manufacturing tolerances and change without notice.

⚠WARNING: *Cancer and Reproductive Harm – www.P65warnings.ca.gov*
⚠ADVERTENCIA: *Cáncer y daño reproductivo – www.P65warnings.ca.gov*
⚠AVERTISSEMENT: Cancer *et effets néfastes sur la reproduction – www.P65warnings.ca.gov*

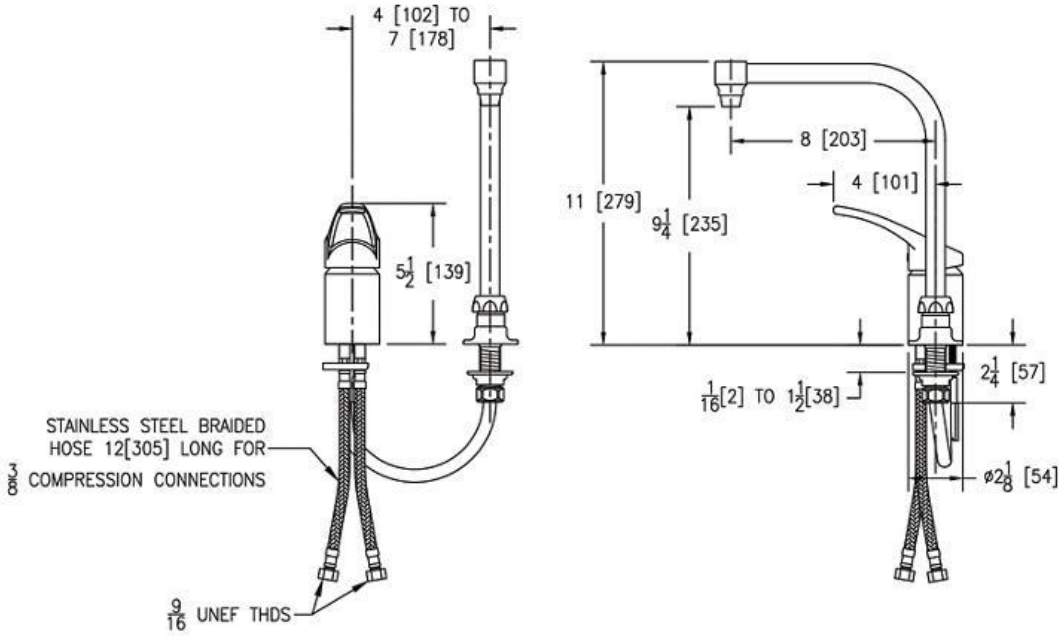

NOTE: All dimensions are for reference only. Do not use for pre-plumbing.

Design and dimensional data (inches and [mm]) are subject to manufacturing tolerances and change without notice.

⚠WARNING: *Cancer and Reproductive Harm – www.P65warnings.ca.gov*
⚠ADVERTENCIA: *Cáncer y daño reproductivo – www.P65warnings.ca.gov*
⚠AVERTISSEMENT: Cancer *et effets néfastes sur la reproduction – www.P65warnings.ca.gov*