# Model(s) Z6020AV-BWN

Concealed Manual Flush Valve with Bedpan Washer for Water Closets

TAG_____

## Architectural/Engineering Specification:

Concealed, quiet diaphragm-type, rough brass, flushometer valve with Zurn's AquaVantage® TPE, chloramine resistant, dual seal diaphragm with a clog resistant, triple filtered by-pass. The valve is complete with a non-hold open and no leak push button feature, bedpan washer assembly, wall bracket and support rod, high back pressure vacuum breaker, one piece hex coupling nut, adjustable tailpiece, spud coupling and flange for top spud connection. Control stop has internal siphon-guard protection and a sweat solder kit. Internal seals are made of chloramine resistant materials.

## FLOW OPTIONS:

| | | Flush Volume |
|---|---|---|
| ☐ | -WS1 | 1.6 gpf |
| ☐ | -Standard | 3.5 gpf |
| ☐ | -FF | 4.5 gpf |

## SUFFIX OPTIONS:

| | | |
|---|---|---|
| ☐ | -L3 | 3" [76mm] Metal Push Button |
| ☐ | -YJ | Split Ring Pipe Support |
| ☐ | -YK | Solid Ring Pipe Support |

**Although products with certain combinations of options and features will meet or comply with these standards and/or certifications, not every combination of options and features will result in such compliance. If you have any questions about your particular product, please contact our Customer Care Dept. at 1-855-ONE-ZURN (United States) or 1-877-892-5216 (Canada) for confirmation.*

Installation Guide - FV335.pdf

Architectural/Engineering Approval

*Design and dimensional data (inches and [mm]) are subject to manufacturing tolerances and change without notice.*

⚠WARNING: *Cancer and Reproductive Harm – www.P65warnings.ca.gov*
⚠ADVERTENCIA: *Cáncer y daño reproductivo – www.P65warnings.ca.gov*
⚠AVERTISSEMENT: Cancer *et effets néfastes sur la reproduction – www.P65warnings.ca.gov*

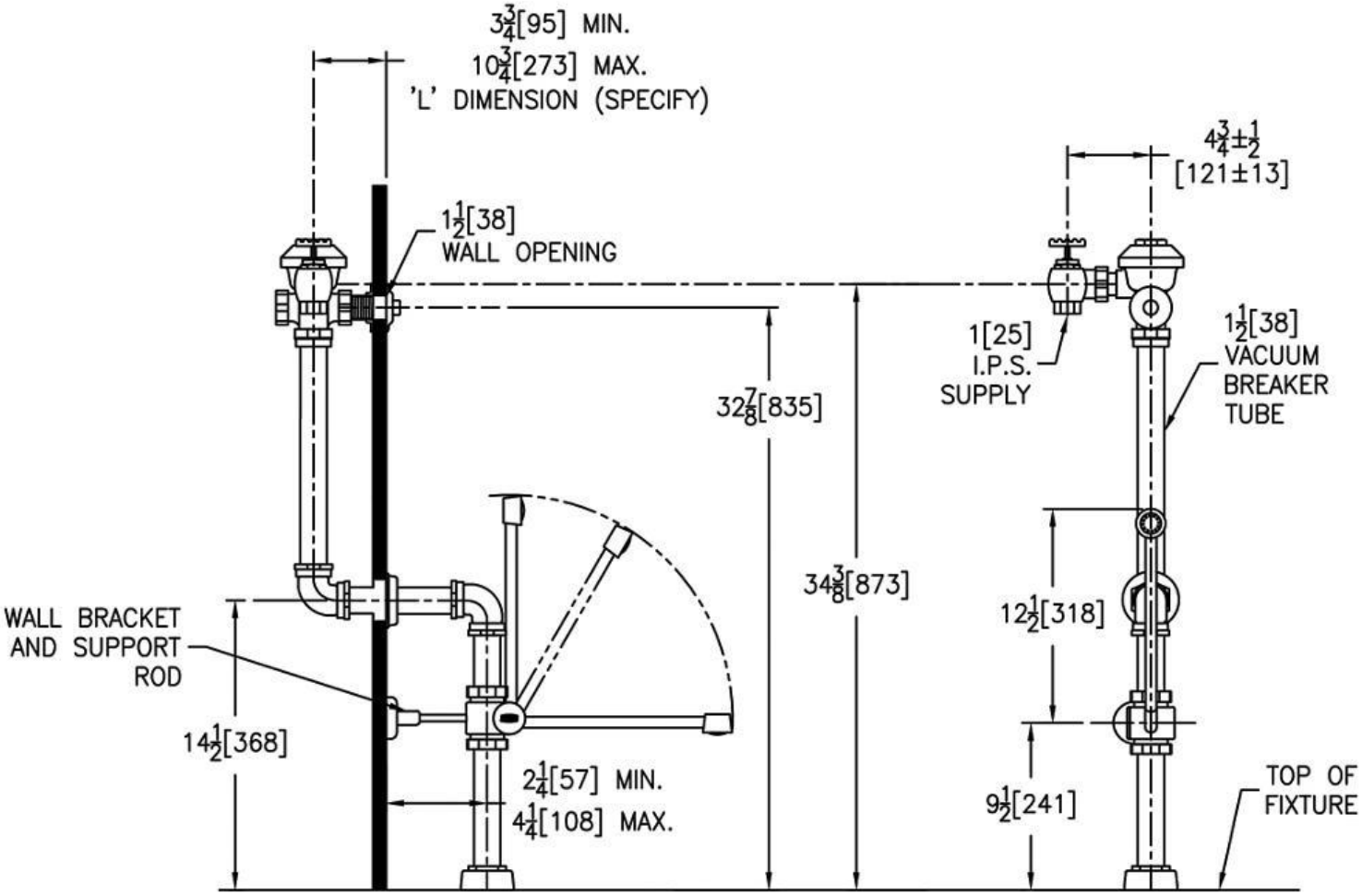


NOTE: All dimensions are for reference only. Do not use for pre-plumbing.

*Design and dimensional data (inches and [mm]) are subject to manufacturing tolerances and change without notice.*

⚠WARNING: *Cancer and Reproductive Harm – www.P65warnings.ca.gov*
⚠ADVERTENCIA: *Cáncer y daño reproductivo – www.P65warnings.ca.gov*
⚠AVERTISSEMENT: Cancer *et effets néfastes sur la reproduction – www.P65warnings.ca.gov*