Model F100G

Fire Hose Valve - Grooved Inlet

TAG

Application

Zurn Model F100G Fire Hose Valves are standpipe valves listed for use on a fire hose rack assembly, or as a fire department outlet connection.

c UL us LISTED

Standards Compliance

- UL® Listed
- C-UL®, ULC® Listed (2-1/2" only)
- FM® Approved

Materials

Main Valve Body	Brass C37700
Handwheel	Aluminum A03600
Handwheel Bolt	Brass C37700
Handwheel Retaining Washer	304 Stainless Steel
O-rings	EPDM (A70)



2 1/2" F100G

Features

Sizes	1-1/2", 2-1/2"
Maximum inlet pressure	300 psi
Inlet connection	FNPT or Grooved
Outlet connection	Male hose
Outlet connection	FNPT
Outlet connection	Special Thread (optional)
Cv 2-1/2"	148
Cv 1-1/2"	42

Options (Suffixes can be combined)

F	FNPT inlet and outlet angle valve
ST	With special hose thread outlet
CH	With chrome finish (Request lead time)

Flow Characteristic

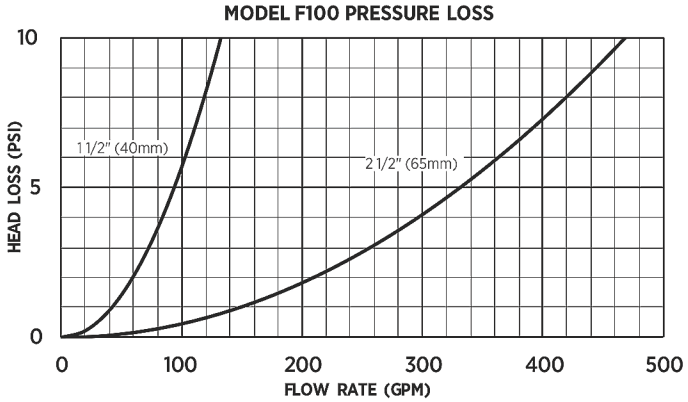

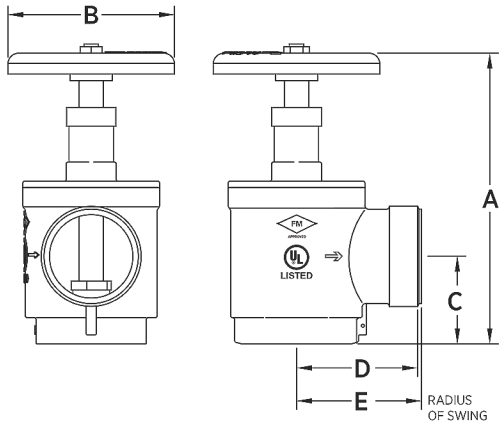

Dimensions & Weights (do not include pkg.)

MODEL	DIMENSIONS (approximate)													
	A OPEN		A CLOSED		B		C		D		E		WEIGHT	
	in.	mm			in.	mm	in.	mm	in.	mm	in.	mm	lbs	kg
112-F100	7 3/4	195	6 3/4	169	4	100	2	50	2 1/2	63	2 3/4	68	4	2
112-F100F	7 3/4	195	6 3/4	169	4 1/8	103	2	50	2 5/8	66	2 7/8	72	4	2
212-F100	10 5/8	268	8 7/8	225	5	127	2 3/4	68	3 1/8	79	3 1/2	88	8	4
212-F100F	10 5/8	268	8 7/8	225	5	127	2 3/4	68	3 3/8	84	3 3/4	94	8	4
212-F100G	11 1/2	291	9 7/8	248	5	127	3 5/8	91	3 1/8	79	n/a	n/a	9	4
212-F100GF	11 1/2	291	9 7/8	248	5	127	3 5/8	91	3 3/8	84	n/a	n/a	9	4

Design and dimensional data (inches and [mm]) are subject to manufacturing tolerances and change without notice.