Model 975XL3BFSS

Backflow Preventer - Reduced Pressure Principle Assembly with Butterfly Shutoff Valves and Supervisory Switches

TAG

Application

Ideal for use where Lead Free* valves are required. Designed for installation on potable water lines to protect against both backsiphonage and backpressure of polluted water into the potable water supply. Assembly shall provide protection where a potential health hazard exists. Features slow closing resilient seated UL/FM approved butterfly shutoffs with a supervisory switch. For indoor or outdoor use.

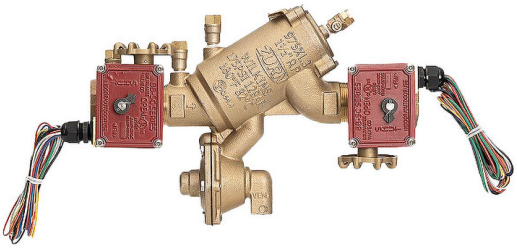

1-1/2" 975XL3BFSS

Standards Compliance

- ASSE® Listed 1013
- cUPC® Listed
- CSA® Certified B64.4
- UL® Classified
- C-UL® Classified
- Approved by the Foundation for Cross Connection Control and Hydraulic Research at the University of Southern California (2" only)
- Meets the requirements of NSF/ANSI/CAN 61 and 372*

*(LESS THAN 0.25% WEIGHTED AVERAGE LEAD CONTENT)

Features

Sizes	1-1/4", 1-1/2", 2"
Minimum working water pressure	25 psi
Maximum working water pressure	175 psi
Minimum working water temperature	33°F
Maximum working water temperature	180°F
Hydrostatic test pressure	350 psi
End connections Threaded (FNPT)	ANSI B1.20.1
Relief Valve discharge port	1/2" - 1" - 0.29 sq. in. 1-1/4" - 1-1/2" - 0.59 sq. in. 2" - 0.93 sq. in.

Materials

Main Valve Body	Low Lead Cast Bronze ASTM B584
Access Covers	Low Lead Cast Bronze ASTM B584
Elastomers	Silicone (FDA approved) Buna Nitrile (FDA approved)
Fasteners	300 series Stainless Steel
Polymers	NORYL™
Springs	300 series Stainless Steel

Options (Suffixes can be combined)

- FT With "Fast Test" test cocks

Accessories

- Repair Kits (1-1/4" - 2")
- Water Hammer Arrestor 1260XL
- In-Line Single Check Valve 40XL2
- Air Gap Fitting for RP Backflow AG
- Wye Strainer SXL
- Thermal Expansion Tank XT
- Quick Test Fitting Set QT-SET

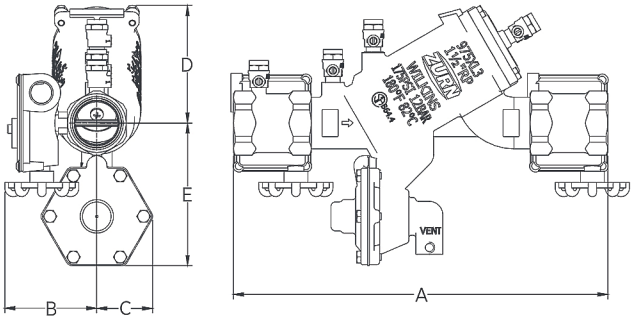

975XL3BFSS SHOWN

Dimensions & Weights (do not include pkg.)

MODEL SIZE		DIMENSIONS (approximate)										WEIGHT	
		A		B		C		D		E			
in.	mm	in.	mm	in.	mm	in.	mm	in.	mm	in.	mm	lbs.	kg
1 1/4	30	13 1/2	343	3 5/16	84	2 1/16	52	4 5/16	110	5 1/4	134	17	7.7
1 1/2	40	13 7/8	352	3 7/16	86	2 1/16	52	4 5/16	110	5 1/4	134	18	8.2
2	50	15 11/16	399	4 7/16	113	2 5/8	67	4 15/16	125	6 11/16	170	22	10.0

Design and dimensional data (inches and [mm]) are subject to manufacturing tolerances and change without notice.

Flow Characteristics

◇ Rated Flow (established by approval agencies)

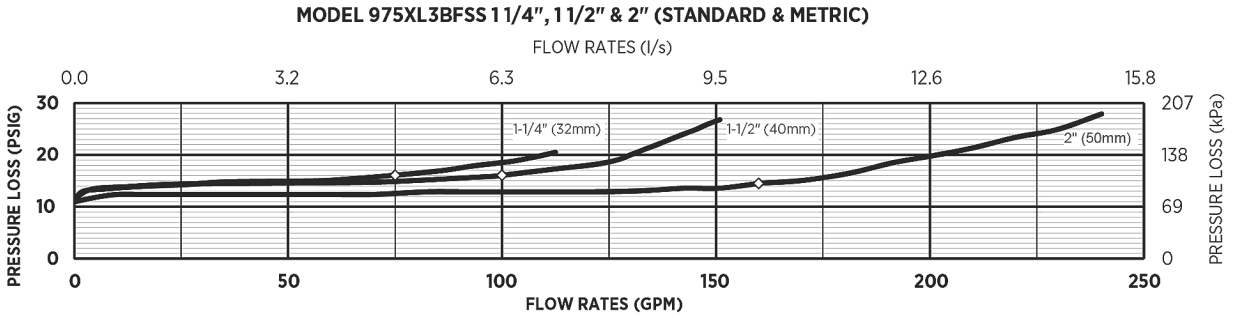

Typical Installation

Local codes shall govern installation requirements. To be installed in accordance with the manufacturer's instructions and the latest edition of the Uniform Plumbing Code. Unless otherwise specified, the assembly shall be mounted at a minimum of 12" (305mm) and a maximum of 30" (762mm) above adequate drains with sufficient side clearance for testing and maintenance. The installation shall be made so that no part of the unit can be submerged.

Capacity thru Schedule 40 Pipe				
Pipe size	5 ft/sec	7.5 ft/sec	10 ft/sec	15 ft/sec
1/8"	1	1	2	3
1/4"	2	2	3	5
3/8"	3	4	6	9
1/2	5	7	9	14
3/4"	8	12	17	25
1"	13	20	27	40
1 1/4"	23	35	47	70
1 1/2"	32	48	63	95
2"	52	78	105	167

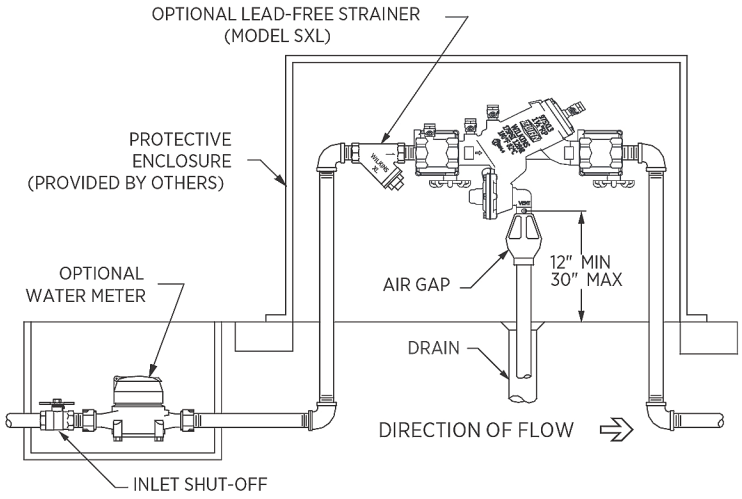

OUTDOOR INSTALLATION

Installation and Maintenance Instructions - Model 975XL3

Specifications

The Reduced Pressure Principle Backflow Preventer shall be certified to NSF/ANSI/CAN 61 and 372, shall be ASSE Listed 1013, rated to 180°F, and supplied with UL/FM approved butterfly valves with supervisory switch. The main body and access covers shall be low lead bronze (ASTM B 584), the seat ring and all internal polymers shall be NORYL™ and the seat disc elastomers shall be silicone. The first and second check shall be at an angle and accessible for maintenance from the top of the device, without removing the device from the line. The checks shall share a single access cover and the test cocks shall be accessible from the top of the device. If installed indoors, the installation shall be supplied with an air gap adapter. The Reduced Pressure Principle Backflow Preventer shall be a WILKINS Model 975XL3BFSS.