Model 625XL

Water Pressure Reducing Valve with Integral Strainer - Competitor Replacement Length

TAG

Application

This valve directly replaces a single union competitor model 25AUB. Ideal for use where Lead-Free* valves are required. Designed for installation on potable water lines to reduce high inlet pressure to a lower outlet pressure. The integral strainer makes this device most suitable for residential and commercial water systems requiring frequent cleaning because of sediment and debris. The direct acting integral by-pass design prevents buildup of excessive system pressure caused by thermal expansion. The balanced piston design enables the regulator to react in a smooth and responsive manner to changes in system flow demand, while at the same time, providing protection from inlet pressure changes.

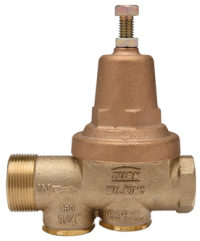

3/4"-625XLSULU

Standards Compliance

- ASSE® Listed 1003
- cUPC® Listed
- CSA® Certified B356
- City of Los Angeles Approved
- Meets the requirements of NSF/ANSI/CAN 61 and 372*

*(0.25% MAX. WEIGHTED AVERAGE LEAD CONTENT)

Materials

Main Valve Body	Low Lead Cast Bronze ASTM B584
Access Covers	Low Lead Brass
	Low Lead Cast Bronze ASTM B584
Cap Gaskets	Acetal (Delrin®)
	Natural Vulcanized Fibre
Elastomers	Buna Nitrile (FDA approved)
	EPDM (FDA approved)
Fasteners	300 series Stainless Steel
Seats	300 series Stainless Steel
Stem and Plunger	Low Lead Brass
	Low Lead Cast Bronze ASTM B584
Strainer Screen	300 Series Stainless Steel

Features

Sizes	3/4", 1"
Maximum working water pressure	300 psi
Maximum working water temperature	140°F
Reduced pressure range (standard)	25 psi to 75 psi
Factory preset	50 psi
Hydrostatic test pressure	300 psi

Options (Suffixes can be combined)

	Standard with 20 mesh strainer screen, SU, FNPT
L	Less integral by-pass check valve
HR	75 psi to 125 psi spring range, factory set at 85 psi
HLR	10 psi to 125 psi spring range, factory set at 50 psi
HTSTSC	180°F maximum temp, stainless steel trim, spring, sealed cage
SULU	Single union connection valve, less union assembly (for replacements where existing union nut and tailpiece will be used)
LPV	180°F maximum temp 10 psi to 35 psi spring range, factory set at 20 psi
SC	Sealed cage bell housing and stainless steel adjustment screw
CH	Chrome stem and plunger
C	Single union copper sweat x FNPT
P	Tapped and plugged for gauge
G	Tapped and plugged with gauge

Accessories

- Repair Parts - 625XL 3/4" to 1"

Dimensions & Weights (do not include pkg.)

SIZE		CONNECTIONS	DIMENSIONS (approximate)								WEIGHT	
			A		B		C		D			
in.	mm		in.	mm	in.	mm	in.	mm	in.	mm	lbs.	kg.
3/4	20	SINGLE UNION	5 5/16	135	5 1/2	140	1 1/4	32	2 3/4	70	3	1.5
3/4	20	LESS UNION	4 5/8	117	5 1/2	140	1 1/4	32	2 3/4	70	3	1.5
1	25	SINGLE UNION	6	152	7 1/4	184	2	51	3 3/8	86	5	2.5
1	25	LESS UNION	5 3/16	132	7 1/4	184	2	51	3 3/8	86	5	2.5

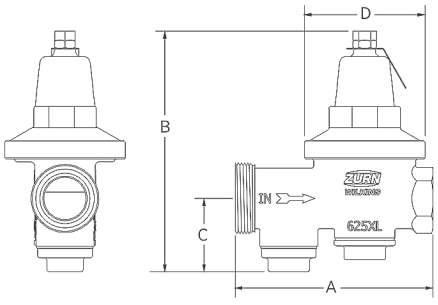

Model 625XLSULU

Design and dimensional data (inches and [mm]) are subject to manufacturing tolerances and change without notice.

Typical Installation

Local codes shall govern installation requirements. Unless otherwise specified, the assembly shall be mounted in accordance with the latest edition of the Uniform Plumbing Code. The Model 625XL may be installed in any position. If installed in a pit, vault or inside application, specify the "SC" sealed cage option. Multiple installations are recommend for wide demand variations or where the desired pressure reduction is more than 3 to 1 (i.e.: 150 psi inlet reduced to 50 psi outlet).

CAUTION: Anytime a reducing valve is adjusted, a pressure gauge must be used downstream to verify correct pressure setting. Do not bottom adjustment bolt on bell housing.

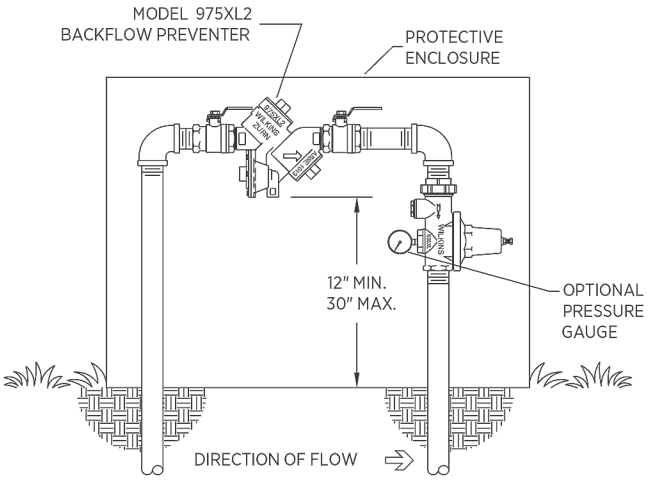

OUTDOOR INSTALLATION

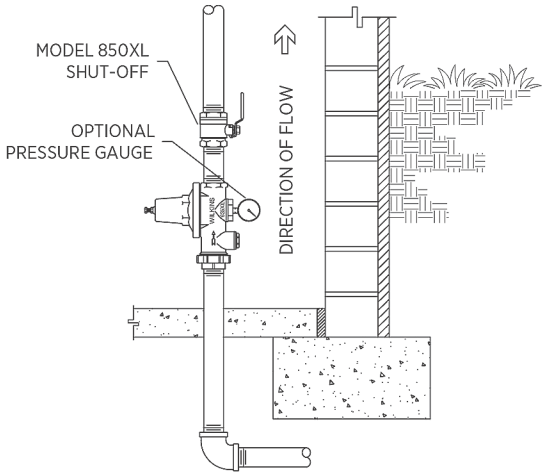

VERTICAL INSTALLATION

Installation and Maintenance Instructions - 3/4" - 1" Model 625XL

Specifications

The Pressure Reducing Valve shall be certified to NSF/ANSI/CAN 61 and 372, consist of a low lead bronze body and bronze bell housing, shall have separate access covers for the plunger and strainer screen and shall have a bolt to adjust the downstream pressure. The Pressure Reducing Valve shall reduce pressure in both flow and no-flow conditions. The bronze bell housing and access caps shall be threaded to the body and shall not require the use of ferrous screws. The Pressure Reducing Valve shall be a WILKINS Model 625XL.