Model 48OSY

Resilient Wedge Gate Valve with Outside Stem & Yoke (OS&Y)

TAG

Application

Designed for installation on potable water lines, Irrigation systems, Waterworks connections, and Fire systems.

LEAD-FREE UPC ®

LEAD FREE

Standards Compliance

- AWWA Compliant C515, C-550
- UL® Listed
- C-UL® Listed
- FM® Approved
- Meets the requirements of NSF/ANSI/CAN 61 and 372*

*(LESS THAN 0.25% WEIGHTED AVERAGE LEAD CONTENT)

Materials

Coatings	AWWA C550 compliant fusion-bond epoxy finish (meets the requirements of NSF/ANSI/CAN 61)
Covers	Ductile Iron ASTM A536 65-45-12
Elastomers	EPDM (FDA approved)
Fasteners	Zinc plated steel Grade 8.8 Brass ASTM B584 UNS C83600
Handwheel	Ductile Iron ASTM A536 65-45-12
Internals	Stainless Steel ASTM A276 UNS S42000
Main Body	Ductile Iron ASTM A536 65-45-12
Stems	300 series Stainless Steel
Wedge	Ductile Iron ASTM A536 65-45-12 W/EPDM

Features

Sizes	2-1/2", 3", 4", 6", 8", 10", 12"
Maximum working water pressure	250 PSI
Maximum working water temperature	140°F
Hydrostatic test pressure	500 PSI
End connections (Grooved for steel pipe)	ANSI/AWWA C606
End connections (Flanged bolt pattern)	ANSI/ASME B16.42 Class 150



4" 48OSY

Options (Suffixes can be combined)

- **OSY** OS&Y with flanged end connections
- **OSYG** OS&Y with grooved end connections
- **OSYGXF** OS&Y with grooved x flanged end connections

Accessories

- Repair Kits (2-1/2" - 12")
- OSY Gate Valve Supervisory Switch OSY-40

Dimensions & Weights (do not include pkg.)

SIZE		DIMENSIONS (approximate)									
		A (all gates)		B (flanged)		C		D (OS&Y open)		D (OS&Y closed)	
in.	mm	in.	mm	in.	mm	in.	mm	in.	mm	in.	mm
2 1/2	65	7 1/2	191	7	178	7 7/8	200	17 3/4	451	15 3/8	391
3	80	8	203	7 1/2	191	10 1/4	260	20 1/4	514	17	432
4	100	9	229	9	229	10 1/4	260	22 1/2	572	18 1/4	464
6	150	10 1/2	267	11	279	12 1/2	318	30 1/2	775	24 1/4	616
8	200	11 1/2	292	13 1/2	343	14 3/4	375	37	940	28 1/2	724
10	250	13	330	16	406	16 3/8	416	45 5/8	1159	34 3/4	883
12	300	14	356	19	483	17 1/2	445	53	1346	40 1/2	1029

SIZE		TAP SIZE	BOLTS (flanged gates)		OS&Y (FXF)		OS&Y (GXF)		OS&Y (GXG)	
in.	mm		# OF (per flange)	size	lbs.	kg	lbs.	kg	lbs.	kg
2 1/2	65	1/2-14NPT	4	5/8	42	19	37	17	31	14
3	80	1/2-14NPT	4	5/8	62	28	56	25	50	23
4	100	1/2-14NPT	8	5/8	81	37	71	32	61	28
6	150	3/4-14NPT	8	3/4	127	57	115	52	103	47
8	200	3/4-14NPT	8	3/4	197	89	178	81	159	72
10	250	3/4-14NPT	12	7/8	309	140	282	128	255	116
12	300	3/4-14NPT	12	7/8	442	200	**Not Available in 12" 48OSYGXF and 12" 48OSYG**			

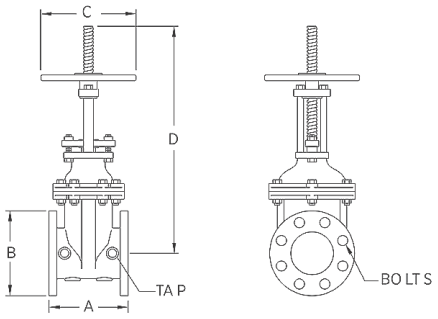

(OS&Y FXF SHOWN)

Installation Instructions (pdf) - 48OSY