Model 475DA

Backflow Preventer - N- Pattern Reduced Pressure Principle Detector Assembly

TAG

Application

Designed for installation on water lines in fire protection systems to protect against both backsiphonage and backpressure of contaminated water into the potable water supply. The Model 475DA shall provide protection where a potential health hazard exists. Incorporates metered by-pass to detect leaks and unauthorized water use.

Standards Compliance

- ASSE® Listed 1047 (4″ thru 8″)
- AWWA Compliant C550
- UL® Classified (4″ thru 10″)
- C-UL® Classified (4″ thru 10″)
- FM® Approved (4″ thru 8″)
- NYC MEA 170-02-M VOL 2 (4″ thru 8″)
- Approved by the Foundation for Cross Connection Control and Hydraulic Research at the University of Southern California (4″ thru 8″)
- Meets the requirements of NSF/ANSI/CAN 61 and 372*

*(0.25% MAX. WEIGHTED AVERAGE LEAD CONTENT)

Materials

Main Valve Body	Ductile Iron ASTM A536 Grade 4
Access Covers	Ductile Iron ASTM A536 Grade 4
Coatings	Fusion Epoxy Finish (FDA approved)
Elastomers	Buna Nitrile (FDA approved)
	EPDM (FDA approved)
Fasteners	300 series Stainless Steel
Polymers	NORYL™
Springs	300 series Stainless Steel

Features

Sizes	4″, 6″, 8″, 10″
Maximum working water pressure	175 PSI
Maximum working water temperature	140°F
Hydrostatic test pressure	350 PSI
End connections (Grooved for steel pipe)	AWWA C606
End connections (Flanged)	ANSI/ASME B16.42 Class 150
Relief Valve discharge port	2-1/2″ - 6″ -2.75 sq. in.
	8″ - 10″ - 3.69 sq. in.



4″ 475DA

Options (Suffixes can be combined)

	With flanged end OS&Y gate valves (standard)
	With gpm meter (standard)
L	Less shut-off valves (grooved body connections)
LM	Less water meter
CFM	With cu ft/min meter
PI	With post indicator gate valves
BG	With grooved end butterfly valves with integral supervisory switches
V	Vertical flow up configuration
BF	With flanged end butterfly valves with integral supervisory switches
G	With grooved end connections
GF	With grooved inlet gate connection and flanged outlet gate connection
FG	With flanged inlet gate connection and grooved outlet gate connection

Accessories

- Repair Kits (4″ - 10″)
- Repair Kits – RP Relief Valve
- Air Gap Fitting for RP Backflow AG
- Valve Setters (FLS, MJFS, MJS) Valve Setters
- Thermal Expansion Tank XT
- OSY Gate Valve Supervisory Switch OSY-40
- Quick Test Fitting Set QT-SET

Dimensions & Weights (do not include pkg.)

MODEL 475DA	WEIGHT									
	LESS SHUTOFF VALVES		WITH OS&Y GATES (GXF)		WITH OS&Y GATES (GXG)		WITH BFLY VALVES (GXF)		WITH BFLY VALVES (GXG)	
	lbs.	kg	lbs.	kg	lbs.	kg	lbs.	kg	lbs.	kg
4"	113	51	303	137	279	127	183	83	161	73
6"	187	85	487	221	465	211	291	132	261	118
8"	421	191	897	407	843	382	611	277	565	256
10"	439	199	1113	505	1055	479	713	323	655	297

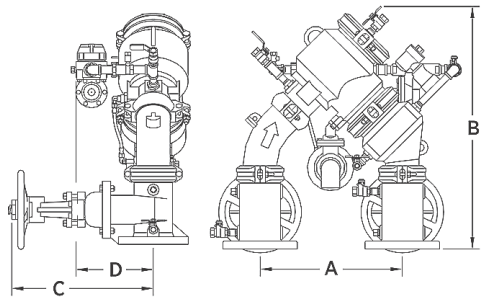

MODEL 475DA SIZE	DIMENSIONS (approximate)															
	A		B WITH GATE VALVES		B WITH BFLY VALVES		B LESS GATE VALVES		C OS&Y OPEN		C OS&Y CLOSED		C WITH BFLY VALVES		D	
	in.	mm	in.	mm	in.	mm	in.	mm	in.	mm	in.	mm	in.	mm	in.	mm
4" 475DA	18 5/16	465	30	762	27 3/4	705	21	533	22 3/4	578	18 1/4	464	9	229	8	203
6" 475DA	18 11/16	475	35 1/2	902	32 1/8	816	25	635	30 1/8	765	23 3/4	603	10 1/4	260	10	254
8" 475DA	29	737	46	1168	42 9/16	1081	34 7/16	875	37 3/4	959	29 1/4	743	12	305	13	330
10" 475DA	29	737	47 1/2	1207	44 7/16	1129	34 7/16	875	45 3/4	1162	35 3/8	899	13	330	13	330

Flow Characteristics

◊Rated Flow (established by approval agencies) (*UL curve)

MODEL 475DA 4" & 6" (STANDARD & METRIC)

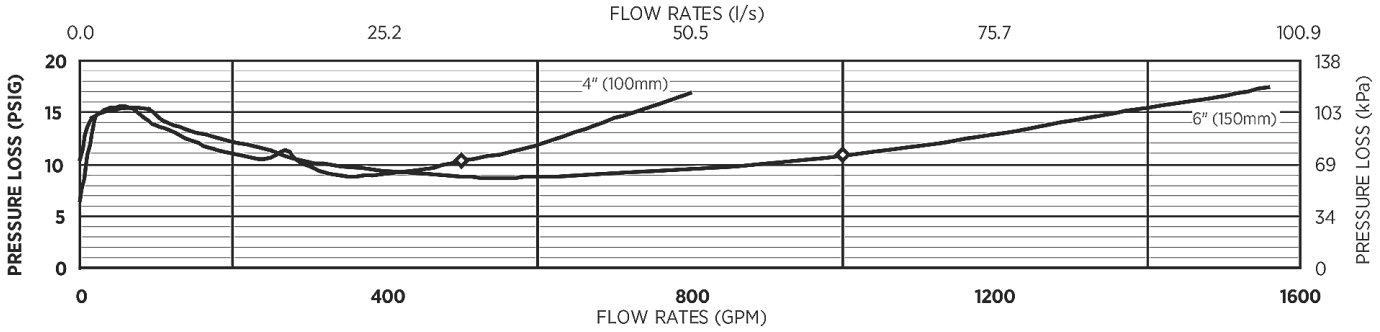

MODEL 475DA 8" & 10" (STANDARD & METRIC)

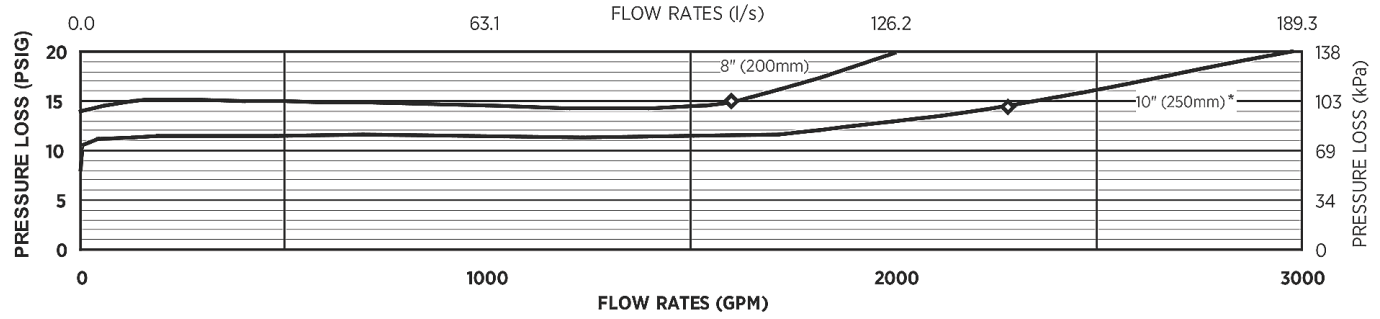

Typical Installation
Local codes shall govern installation requirements. To be installed in accordance with the manufacturers' instructions and the latest edition of the Uniform Plumbing Code. Unless otherwise specified, the assembly shall be mounted above adequate drains with sufficient side clearance for testing and maintenance. The installation shall be made so that no part of the unit can be submerged.

Capacity thru Schedule 40 Pipe (GPM)				
Pipe size	5 ft/sec	7.5 ft/sec	10 ft/sec	15 ft/sec
2 1/2"	75	112	149	224
3"	115	173	230	346
4"	198	298	397	595
6"	450	675	900	1351
8"	780	1169	1559	2339
10"	1229	1843	2458	3687

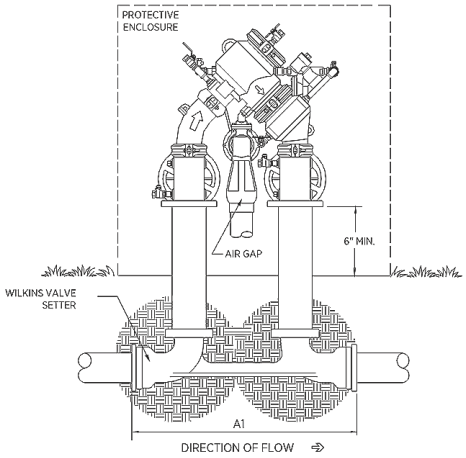

OUTDOOR INSTALLATION

MODEL SIZE		DIMENSIONS (approximate)			
		A1 SETTER END TO END FLS		A1 SETTER END TO END MJS	
in.	mm	in.	mm	in.	mm
4	100	31 5/16	795	29 5/16	745
6	150	34 3/4	884	32 3/4	832
8	200	47	1194	44 5/8	1133
10	250	51	1295	47	1194

Installation and Maintenance Instructions 4" and 6" - Model 475DA

Installation and Maintenance Instructions 8" and 10" - Model 475DA

Specifications
The Reduced Pressure Detector Assembly shall be certified to NSF/ANSI/CAN 61 and 372, ASSE® Listed 1047, and supplied with full port OS & Y gate valves. The main body and access covers shall be epoxy coated ductile iron (ASTM A 536 Grade 4), the seat ring and check valve shall be NORYL™, the stem shall be stainless steel (ASTM A 276) and the seat disc elastomers shall be EPDM. The first and second checks shall be accessible for maintenance without removing the relief valve or the entire device from the line. If installed indoors, the installation shall be supplied with an air gap adapter. The Reduced Pressure Detector Assembly shall be a WILKINS Model 475DA.