WILKINS Model 375ADAR

Replacement Reduced Pressure Detector Assembly

TAG

Application

Designed for drop-in replacement of existing longer lay length assemblies without the need for additional spools or spacers, saving 2 to 6 hours of installation labor and up to 2 machine hours per backflow replacement. A custom sized grooved spool installed between the backflow body and downstream shut-off valve allows customer specified assembly lengths to be shipped directly from the factory. Designed for installation on water lines in fire protection systems to protect against both backsiphonage and backpressure of contaminated water into the water supply. The Model 375ADAR shall provide protection where a potential health hazard exists. Incorporates metered by-pass to detect leaks and unauthorized water use.

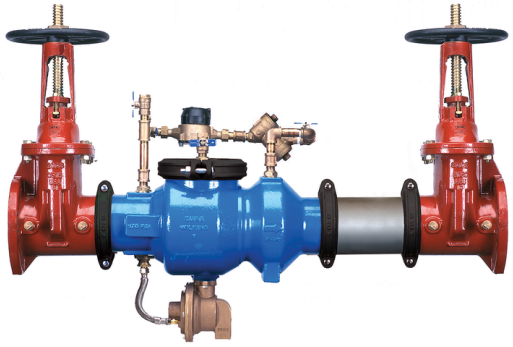

6" 375ADAR

Standards Compliance

- ASSE® Listed 1047 (2-1/2 in. - 8 in.)
- CSA® Certified B64.4 (2-1/2 in. - 8 in.)
- AWWA Compliant C550
- UL® Classified
- C-UL® Classified
- FM® Approved
- Approved by the Foundation for Cross Connection Control and Hydraulic Research at the University of Southern California
- Meets the requirements of NSF/ANSI/CAN 61* *(0.25% MAX. WEIGHTED AVERAGE LEAD CONTENT)
- By-Pass Backflow Assembly 3/4" Model 975XLD

Features

Sizes	2-1/2"*, 3"*, 4", 6", 8", 10"
Maximum working water pressure	175 PSI
Maximum working water temperature	140°F
Hydrostatic test pressure	350 PSI
End connections (Grooved for steel pipe)	AWWA C606
End connections (Flanged bolt pattern)	ASME B16.42 Class 150

*2-1/2" & 3" sizes use 4" body & reducer couplings

Materials

Main Valve Body	Ductile Iron ASTM A536
Access Covers	Ductile Iron ASTM A536
Coatings	Fusion Epoxy Finish (meets the requirements of NSF/ANSI/CAN 61)
Elastomers	EPDM (FDA approved)
	Buna Nitrile (FDA approved)
Fasteners and Springs	300 series Stainless Steel
Internals	300 series Stainless Steel
	NORYL™
Polymers	NORYL™
Sensing Line	Stainless Steel braided hose

Options (Suffixes can be combined)

	With flanged end OS&Y gate valves (standard)
	With gpm meter (standard)
LM	Less water meter
CFM	With cu ft/min meter
PI	With post indicator gate valves

Accessories

- Repair Kits (2-1/2" - 10")
- Air Gap Fitting for RP Backflow AG
- Thermal Expansion Tank XT
- OSY Gate Valve Supervisory Switch OSY-40
- Quick Test Fitting Set QT-SET

Dimensions & Weights (do not include pkg.)

MODEL 375ADAR SIZE		WEIGHT W/MAX SPOOL LENGTH							
		WITH OS&Y GATE VALVES FLANGED		WITH OS&Y GATE VALVES GROOVED		BUTTERFLY VALVES FLANGED		BUTTERFLY VALVES GROOVED	
in.	mm	lbs.	kg	lbs.	kg	lbs.	kg	lbs.	kg
2 1/2	65	220	100	208	94	198	90	187	85
3	80	240	109	228	103	186	84	173	78
4	100	274	124	254	115	202	92	180	81
6	150	425	193	401	182	299	136	269	122
8	200	854	387	816	370	688	312	642	291
10	250	1180	535	1126	511	890	404	832	377

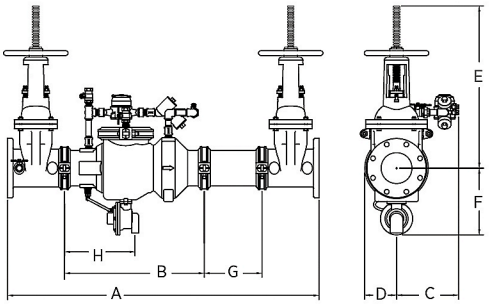

Relief Valve discharge port:
2 1/2" - 6" - 2.75 sq. in.
8" -10" - 3.69 sq. in.

MODEL 375ADAR SIZE		DIMENSION (approximate)																											
		A WITH GATE VALVES				A WITH BUTTERFLY VALVES				B		C		D		E OS&Y OPEN		E OS&Y CLOSED		E WITH BUTTERFLY VALVES		F		G SPOOL LENGTH				H	
		in.		mm		in.		mm																	in.		mm		
in.	mm	min	max	min	max	min	max	min	max	in.	mm	in.		in.	mm	in.	mm	in.	mm	in.	mm	in.	mm	min	max	min	max	in.	mm
2 1/2	65	37 1/4	47 1/8	946	1197	34 1/4	44 1/8	870	1121	20 1/8	511	9	229	4 1/2	114	17 3/4	451	15 3/8	391	17	432	11	279	2 1/8	12	54	305	7 1/4	184
3	80	38 1/4	48 1/8	972	1222	34 3/4	44 5/8	883	1133	20 1/8	511	9	229	4 1/2	114	20 1/4	514	17	432	17	432	11	279	2 1/8	12	54	305	7 1/4	184
4	100	40 1/2	62 1/4	1029	1581	35 3/4	57 1/2	908	1461	19 7/8	505	9	229	4 1/2	114	22 1/2	572	18 1/4	464	17	432	11	279	2 1/4	24	57	610	8	203
6	150	49 1/2	71 1/4	1257	1810	42 1/2	64 1/4	1080	1632	25 7/8	657	10 1/2	267	5 1/2	140	30 1/2	775	24 1/4	616	17 1/2	445	12 3/8	314	2 1/4	24	57	610	10	254
8	200	64 7/8	86	1648	2184	57 7/8	79	1470	2007	38 1/2	978	12	305	10	254	37	940	28 1/2	724	16 15/16	430	15 3/8	391	2 7/8	24	73	610	11	279
10	250	67 3/8	100 5/8	1711	2556	61 7/8	94 5/8	1572	2403	38 1/2	978	12	305	10	254	45 5/8	1159	34 3/4	883	16 15/16	430	15 3/8	391	2 3/4	36	70	914	12	305

Design and dimensional data (inches and [mm]) are subject to manufacturing tolerances and change without notice.

Flow Characteristics

◊Rated Flow (established by approval agencies)

MODEL 375ADAR 2-1/2" - 3" (STANDARD AND METRIC)

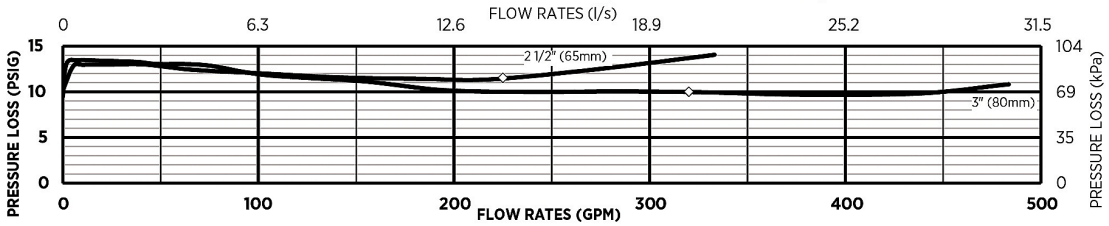

MODEL 375ADAR 4" & 6" (STANDARD & METRIC)

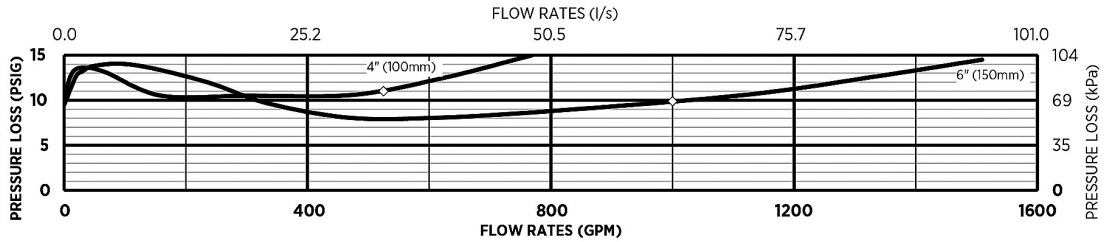

MODEL 375ADAR 8" & 10" (STANDARD & METRIC)

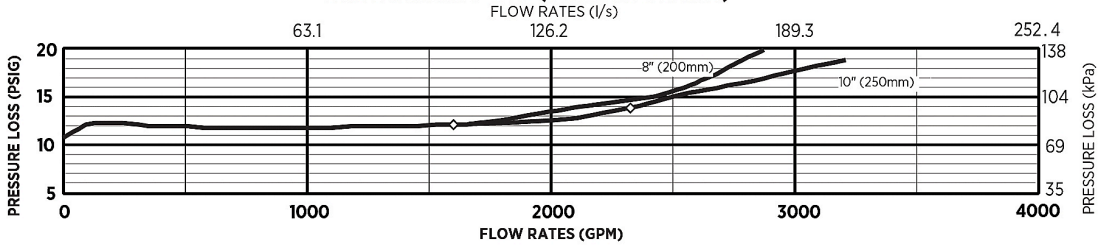

Typical Installation

Local codes shall govern installation requirements. Unless otherwise specified, the assembly shall be mounted at a minimum of 12" (305mm) and a maximum of 30" (762mm) above adequate drains with sufficient side clearance for testing and maintenance. The installation shall be made so that no part of the unit can be submerged.

Order Configuration

- Exact in field measurements are required when ordering the assembly. Please have the assembly length ready when ordering.
- All assemblies are custom made to order and all sales are final.
- Lead time is approximately one week.

Generic part number used for ordering:
X-375ADAR*- A
where X= NOMINAL VALVE SIZE (212 REPRESENTS 2-1/2")
*= ADDED OPTIONS (use suffixes designated in OPTIONS section on previous page)

Example

To order a 4" Model 375ADAR with OS&Y gate valves and an assembly length of 52 3/8", the part number would be 4-375ADAR-A. The length of 52 3/8" must be given to Customer Service.

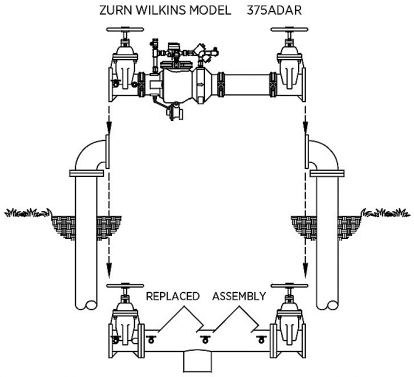

VALVE SIZE	MINIMUM FACE TO FACE DIMENSIONS (OVERALL LAY LENGTH)		MAXIMUM LENGTHS
	DUCTILE IRON GROOVED BODY		
	GATE VALVES	BUTTERFLY VALVES	
2-1/2"	37-1/8"	34-1/8"	47-1/8"
3"	38-1/8"	34-5/8"	48-1/8"
4"	40-1/2"	35-3/4"	62-1/4"
6"	49-1/2"	42-1/2"	71-1/4"
8"	64-7/8"	57-7/8"	86"
10"	67-3/8"	61-7/8"	100-5/8"

Installation and Maintenance Instructions (2-1/2" - 6") - Model 375ADAR

Installation and Maintenance Instructions (8" and 10") - Model 375ADAR

Specifications

The Reduced Pressure Detector Backflow Prevention Assembly shall be certified to NSF/ANSI 61, ASSE® Listed 1047, and supplied with full port OS & Y gate valves. The main body and access cover shall be epoxy coated ductile iron (ASTM A 536), the seat ring and check valve shall be NORYL™, the stem shall be stainless steel (ASTM A 276) and the seat disc elastomers shall be EPDM. The checks and the relief valve shall be accessible for maintenance without removing the device from the line. The Reduced Pressure Detector Backflow Prevention Assembly shall be a WILKINS Model 375ADAR